DISHWASHER
60 CM FREESTANDING DISHWASHER

Hygieneshield

AquaIntense

ProSmart Inverter Motor



BDEN38523XQ

PRODUCT CODE
7652700777

BAR CODE
8690842508912

Dimension(cm)

85	59.8	60
Height	Width	Depth

10 *year warranty*
ProSmart™ Inverter Motor
للحصول على 10 سنوات ضمان على الضاغط ProSmart™، الرجاء تسجيل بياناتك على الرابط
Extwarranty.beko.com

Fast+ Function

Clean dishes and glasses in a flash

Sometimes you don't have time to wait for a full wash cycle to run before you have clean plates and glasses. The Fast+ function makes the washing cycle faster up to 3 times* with optimum performance, meaning you can wash and serve in no time at all.

*Tested by internal laboratories.





Sliding Detergent Dispenser

Easy-to-open dispenser lid

Don't hurt your fingers trying to open the detergent dispenser. The Sliding Detergent Dispenser is so easy to open and close that it makes adding detergent a doddle.

SteamGloss

Water-mark-free glasses

The table's set but your glasses look like they've got water marks on them. SteamGloss's 10-minute long extended heat cycle makes sure that glasses shine like they're brand new. With 23%* shinier glassware and 30%* shinier china, your next dinner table will dazzle anyone around.

*Tested by 3rd party laboratories





Easy-fold Plate Support

Extra room for pots & pans

Every time you cook, you're using different-sized pots and pans, and you need a dishwasher that understands that. The Easy Fold Plate Support lets you easily remove room for plates to fit in those massive pots and pans. The days of having to wash the largest items by hand are gone, and good riddance!

DISHWASHER
60 CM FREESTANDING DISHWASHER

Key Features

- Construction Type: Freestanding
- Size: Full-size
- Place Setting: 15
- Energy Efficiency Class: 4*
- Water Consumption per cycle: 9.5 L
- Noise Level: 44 dBA
- Display Type: LED
- Cutlery Tray: Full-size Cutlery Tray
- Upper-basket Adjustment Type: New 3 Position Loaded Adjustable_L
- Number of Easy Fold Plate Supports (Lower-basket): 4
- Number of Easy Fold Plate Supports (Upper-basket): 3
- Fast+: Available
- Intensive Lower-rack Washing: AquaIntense®
- Time Delay: Yes with Manual Adjustment of up to 24 h
- Colour: Fingerprint-free Stainless Steel

Programmes

- Number of Programmes: 8
- Programme 1: Auto Programme
- Programme 2: AquaFlex Programme
- Programme 3: Intensive 70 °C Programme
- Programme 4: Eco 50 °C Programme
- Programme 5: Delicate 40 °C Programme
- Programme 6: Quick & Shine Programme
- Programme 7: Mini Programme
- Programme 8: Prewash Programme

Functions

- Function 1: Hygiene Intense
- Function 2: SteamGloss
- Function 3: AquaIntense
- Function 4: Fast+
- Sub-function 1: Tablet

Technologies

- Intensive Lower-rack Washing: AquaIntense®
- Fast+: Available
- Time Delay: Yes with Manual Adjustment of up to 24 h
- Tablet Function: Auto Tablet
- Glass Care System: GlassShield
- Dirt Sensor: Available
- Drying System: Active Fan Drying

Basket Design & Standard Accessories

- Cutlery Tray: Full-size Cutlery Tray
- Upper-basket Adjustment Type: New 3 Position Loaded Adjustable_L
- Number of Easy Fold Plate Supports (Lower-basket): 4
- Number of Easy Fold Plate Supports (Upper-basket): 3
- Mug Shelf: Available
- Number of Mug Shelves: 2
- Accessories: Pots&Pans&Tray Holder Accessory

Design

- Colour: Fingerprint-free Stainless Steel
- Tub Material: Stainless Steel Tub
- Display Type: LED
- Direct Access Control System: E9L-BLDC
- Spray Arm Design: Robust Spray Arm
- Sliding Detergent Dispenser: Available

Performance & Consumption

- Place Setting: 15
- Energy Efficiency Class: 4*
- Energy Consumption (kWh/cycle): 0.9 kWh
- Annual Energy Consumption: 263 kWh/year
- Water Consumption per cycle: 9.5 L
- Annual Water Consumption: 2629
- Noise Level: 44 dBA
- Number of Spray Levels: 3
- Voltage: 220 - 240 V
- Frequency: 50 Hz
- Connected Value (w): 1800-2100

Dimensions & Weight

- Height: 85 cm
- Width: 59.8 cm
- Depth: 60 cm
- Weight: 49.4 kg
- Packaged Height: 88.9 cm
- Packaged Width: 64.4 cm
- Packaged Depth: 66.1 cm
- Packaged Weight: 51.4 kg

Safety

- Water Inlet Safety: WaterSafe

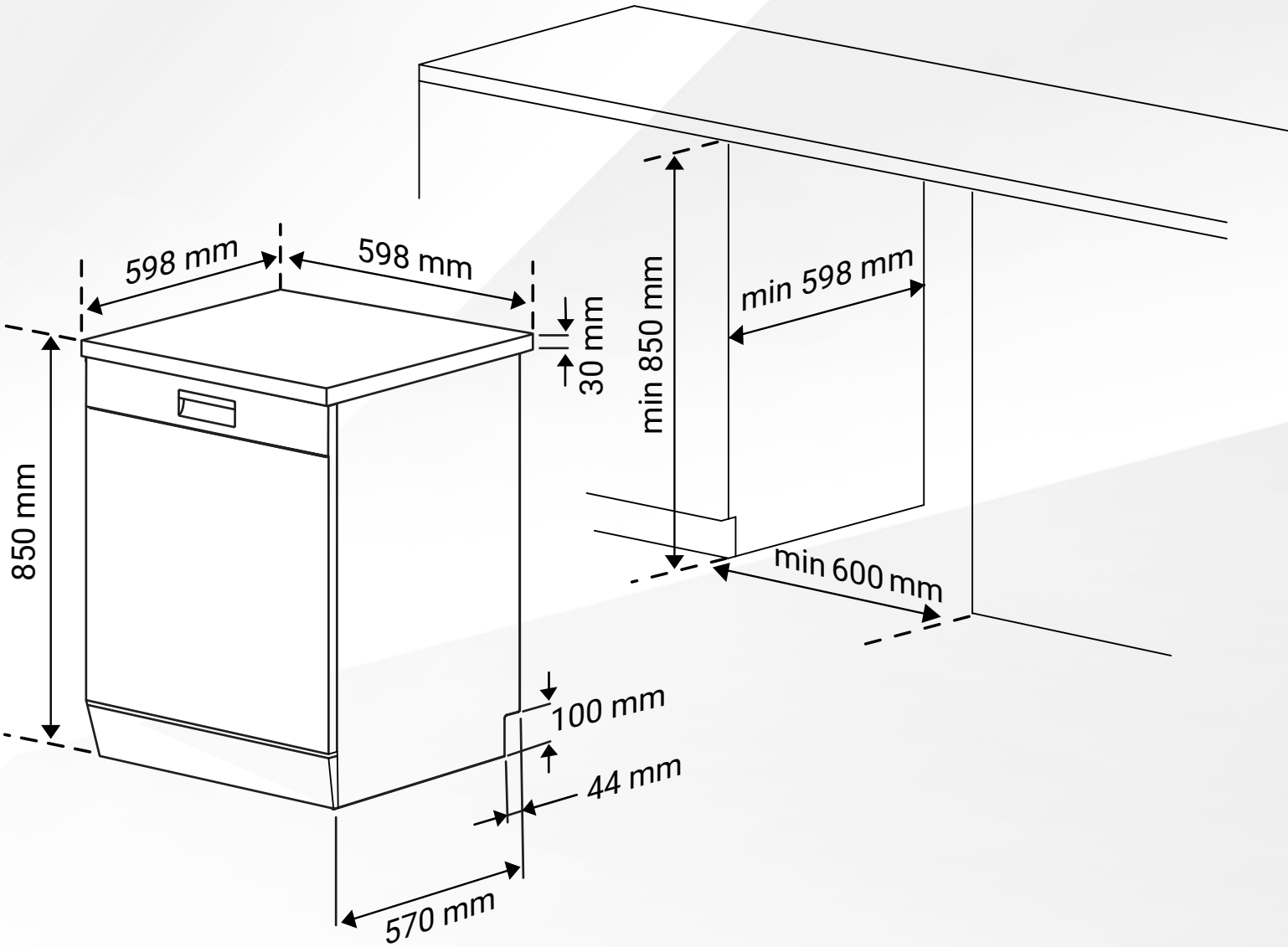
598 mm
598 mm
30 mm
850 mm
min 850 mm
min 598 mm
min 600 mm
100 mm
44 mm
570 mm