# DISHWASHER
## 60 CM FREESTANDING DISHWASHER

Homewhiz Bluetooth | Autodose Technology | ProSmart Inverter | Hygieneshield | CornerIntense®



# BDEN38533GC

PRODUCT CODE
**7653000777**

BAR CODE
**8690842509049**

## Dimension(cm)

| 85 | 59.8 | 60 |
|---|---|---|
| Height | Width | Depth |

10 year warranty
ProSmart™ Inverter Motor
للحصول على 10 سنوات ضمان على الضاغط Prosmart™، الرجاء تسجيل بياناتك على الرابط
Extwarranty.beko.com

## AutoDose

**Optimum detergent, efficient cleaning**

Forget worrying about using enough detergent, or even adding it before every wash. Just fill your dishwasher with liquid detergent and let Auto-Dose automatically dispense just enough of it for a month. The result? Sparkling clean dishes every single time, without the constant hunt for the detergent bottle.






## SelFit

**Stable door position at any angle**

You are about to unload the dishwasher but the open door takes so much space that not much is left for you to move around. With SelFit, you can balance the door at any angle, so you can load and unload the dishes without the door getting in anyone's way. Plus, the sturdy mechanism can carry furniture doors of up to 9 kg.

## Fast+ Function

**Clean dishes and glasses in a flash**

Sometimes you don't have time to wait for a full wash cycle to run before you have clean plates and glasses. The Fast+ function makes the washing cycle faster up to 3 times* with optimum performance, meaning you can wash and serve in no time at all.

*Tested by internal laboratories.





## Sliding Cutlery Basket

**More room for pots & pans in the lower rack**

The cutlery basket's a clever invention but it gets in the way when you want to place a large pot in the lower rack. Well, the Sliding Cutlery Basket solves that problem by moving freely to the right and left so you have room to fit in those bulkier items.

# DISHWASHER

## 60 CM FREESTANDING DISHWASHER

### Key Features

- Construction Type: Freestanding
- Size: Full-size
- Energy Efficiency Class: 4*
- Display Type: LED
- Cutlery Tray: Full-size Cutlery Tray
- Upper-basket Adjustment Type: New 3 Position Loaded Adjustable_L
- Number of Easy Fold Plate Supports (Lower-basket): 4
- Number of Easy Fold Plate Supports (Upper-basket): 3
- Fast+: Available
- Intensive Lower-rack Washing: Available
- Time Delay: Yes with Manual Adjustment of up to 24 h
- Flexible Half-load: Available
- Colour: Manhattan Grey

### Connectivity

- HomeWhiz Connection Type: Wireless & Bluetooth
- Downloadable Programme 1: QuietWash
- Downloadable Programme 2: Clean & Shine Programme
- Downloadable Programme 3: InnerClean

### Programmes

- Number of Programmes: 11
- Programme 1: Auto Programme
- Programme 2: AquaFlex Programme
- Programme 3: Intensive 70 °C Programme
- Programme 4: Eco 50 °C Programme
- Programme 5: Delicate 40 °C Programme
- Programme 6: Quick & Shine Programme
- Programme 7: Mini Programme
- Programme 8: Prewash Programme
- Programme 9: Downloaded Programme

### Functions

- Function 1: Hygiene Intense
- Function 2: SteamGloss
- Function 3: TrayWash
- Function 4: Fast+
- Function 5: Half-load
- Sub-function 1: Tablet
- Sub-function 2: AutoDose
- Sub-function 3: SelfDry

### Safety

- Water Inlet Safety: WaterSafe

### Technologies

- AutoDose: Available
- Intensive Lower-rack Washing: Available
- Fast+: Available
- SilentTech: Available
- Flexible Half-load: Available
- Time Delay: Yes with Manual Adjustment of up to 24 h
- Tablet Function: Auto Tablet
- Glass Care System: GlassShield
- Dirt Sensor: Available
- Drying System: Active Fan Drying

### Basket Design & Standard Accessories

- Cutlery Tray: Full-size Cutlery Tray
- Upper-basket Adjustment Type: New 3 Position Loaded Adjustable_L
- Number of Easy Fold Plate Supports (Lower-basket): 4
- Number of Easy Fold Plate Supports (Upper-basket): 3
- Cutlery Basket Type: Sliding Cutlery Basket
- Mug Shelf: Available
- Number of Mug Shelves: 2
- Accessories: Pots&Pans&Tray Holder Accessory

### Design

- Colour: Manhattan Grey
- Tub Material: Stainless Steel Tub
- Display Type: LED
- Direct Access Control System: E8L-BLDC
- Spray Arm Design: CornerIntense
- Automatic Door Opening: Available
- Door Installation Type: SelFit

### Performance & Consumption

- Energy Efficiency Class: 4*
- Energy Consumption (kWh/cycle): 0.8 kWh
- Annual Water Consumption: 2635
- Number of Spray Levels: 3
- Voltage: 220 - 240 V
- Frequency: 50 Hz
- Connected Value (w): 1800-2100

### Dimensions & Weight

- Height: 85 cm
- Width: 59.8 cm
- Depth: 60 cm
- Weight: 51.2 kg
- Packaged Height: 88.9 cm
- Packaged Width: 64.4 cm
- Packaged Depth: 66.1 cm
- Packaged Weight: 53 kg

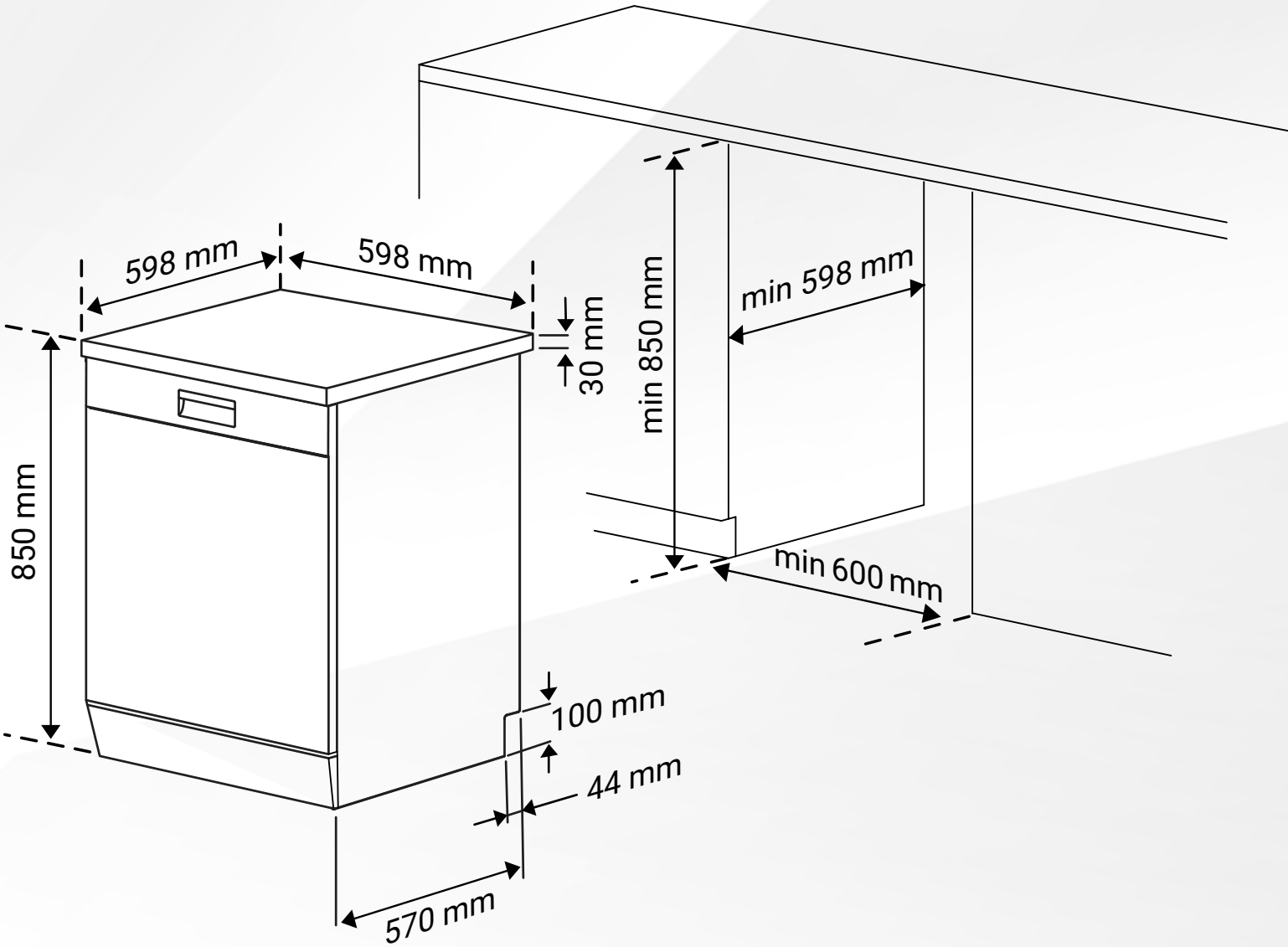
598 mm
598 mm
30 mm
850 mm
min 850 mm
min 598 mm
min 600 mm
100 mm
44 mm
570 mm