DISHWASHER
60 CM FREESTANDING DISHWASHER

Quick&Shine



Sliding Detergent Dispenser

Easy-to-open dispenser lid

Don't hurt your fingers trying to open the detergent dispenser. The Sliding Detergent Dispenser is so easy to open and close that it makes adding detergent a doddle.



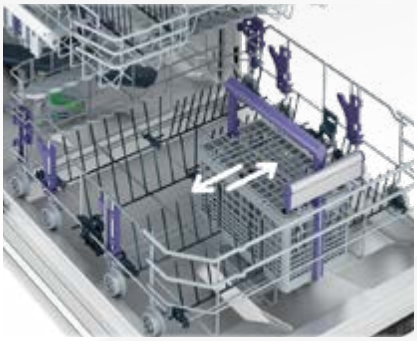

Sliding Cutlery Basket

More room for pots & pans in the lower rack

The cutlery basket's a clever invention but it gets in the way when you want to place a large pot in the lower rack. Well, the Sliding Cutlery Basket solves that problem by moving freely to the right and left so you have room to fit in those bulkier items.

DVN04X20S

PRODUCT CODE
7699563877

BAR CODE

Dimension(cm)

85	59.8	60
Height	Width	Depth

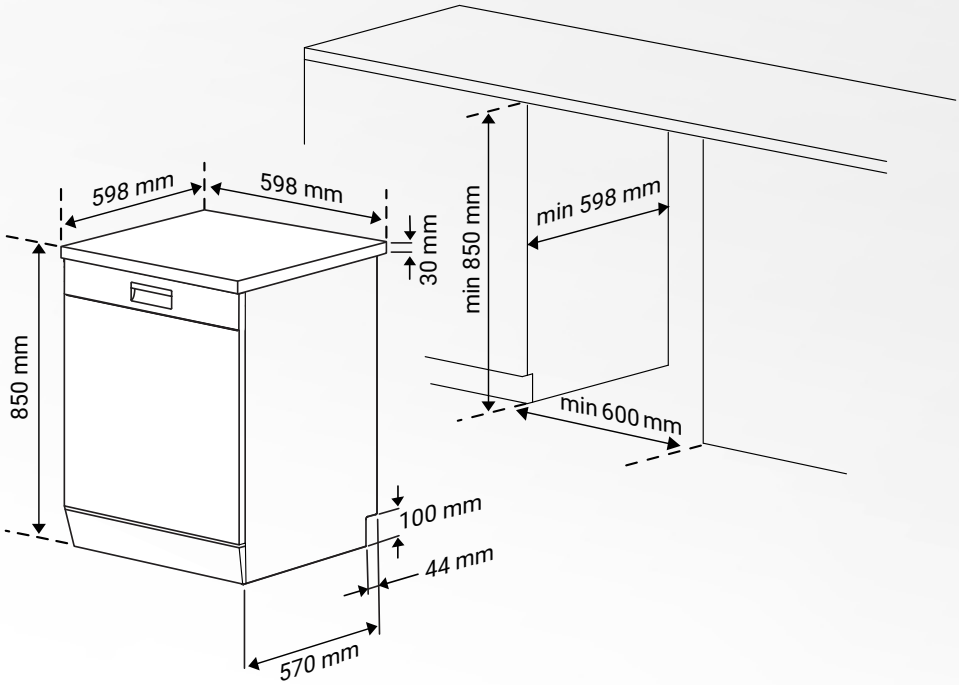

DISHWASHER
60 CM FREESTANDING DISHWASHER



Key Features

- Construction Type: Freestanding
- Size: Full-size
- Energy Efficiency Class: A++
- Energy Efficiency Class: E
- Display Type: LED
- Upper-basket Adjustment Type: Fixed
- Time Delay: Yes with 3 Levels (3h / 6h / 9h)
- Flexible Half-load: Available
- Colour: Silver

Programmes

- Number of Programmes: 4
- Programme 1: Eco 50 °C Programme
- Programme 2: Intensive 70 °C Programme
- Programme 3: Quick & Shine Programme
- Programme 4: Mini Programme

Functions

- Function 1: Half-load
- Function 2: Time Delay
- Sub-function 1: Tablet
- Sub-function 2: Child Lock

Technologies

- Flexible Half-load: Available
- Time Delay: Yes with 3 Levels (3h / 6h / 9h)
- Tablet Function: Auto Tablet
- Drying System: Static

Basket Design & Standard Accessories

- Upper-basket Adjustment Type: Fixed
- Cutlery Basket Type: Sliding Cutlery Basket
- Mug Shelf: Available
- Number of Mug Shelves: 2

Design

- Colour: Silver
- Tub Material: Stainless Steel Tub
- Display Type: LED
- Spray Arm Design: Robust Spray Arm
- Sliding Detergent Dispenser: Available

Performance & Consumption

- Energy Efficiency Class: A++
- Energy Efficiency Class: E
- Energy Consumption (kWh/cycle): 0.9 kWh
- Annual Energy Consumption: 262 kWh/year
- Annual Water Consumption: 3612 L/year
- Number of Spray Levels: 2
- Voltage: 220 - 240 V
- Frequency: 50 Hz
- Noise Class (EU_2021_EP): C
- Connected Value (w): 1800-2100

Dimensions & Weight

- Height: 85 cm
- Width: 59.8 cm
- Depth: 60 cm
- Weight: 42.6 kg
- Packaged Height: 88.9 cm
- Packaged Width: 64.4 cm
- Packaged Depth: 66.1 cm
- Packaged Weight: 44.6 kg

Safety

- Child Lock: Available
- Water Inlet Safety: WaterSafe