STANDARD HOOD

60 CM STANDARD HOOD

Dishwasher Safe Filters



CFB 6433 XH

PRODUCT CODE
8891263200

BAR CODE

Dimension(cm)

15	60	49
Height	Width	Depth

Dishwasher-Safe Filters

Easy-to-clean filters

Nobody wants to hand wash greasy hood filters, and now you don't have to with Dishwasher-Safe Filters. Just pop them in the dishwasher, run a normal cycle, and then pop them back in the hood. Easy!



Key Features

Hood Type	Standard
Width	60 cm
Height	15 cm
Depth	49 cm
Minimum Ventilation Noise Level	55 dBA
Maximum Ventilation Noise Level	70 dBA
Minimum Ventilation Capacity	205 m³/h
Maximum Ventilation Capacity	380 m³/h
Number of Power Levels	3
Colour	Stainless Steel

Design

Controls	Mechanical Slider control
Illumination Type	Halogen
Number of Light Bulbs	2
Light Bulb Power	28 W
Filter Design	Metal Casette Filter

Technologies

Carbon Filters	Yes
Dishwasher-safe Filters	Easy-to-clean filters
Number of Grease Filters	2

Performance & Consumption

Fluid Dynamics (Motor) Efficiency Class	E
Illumination Efficiency Class	E
Grease-filtering Efficiency Class	C
Average Annual Energy Consumption (kWh/Year)	112.6 kWh
Voltage	220 - 240 V
Frequency	50 Hz

Dimensions & Weight

Weight	5.8 kg
Packaged Height	55 cm
Packaged Width	21 cm
Packaged Depth	65 cm
Packaged Weight	6.7 kg

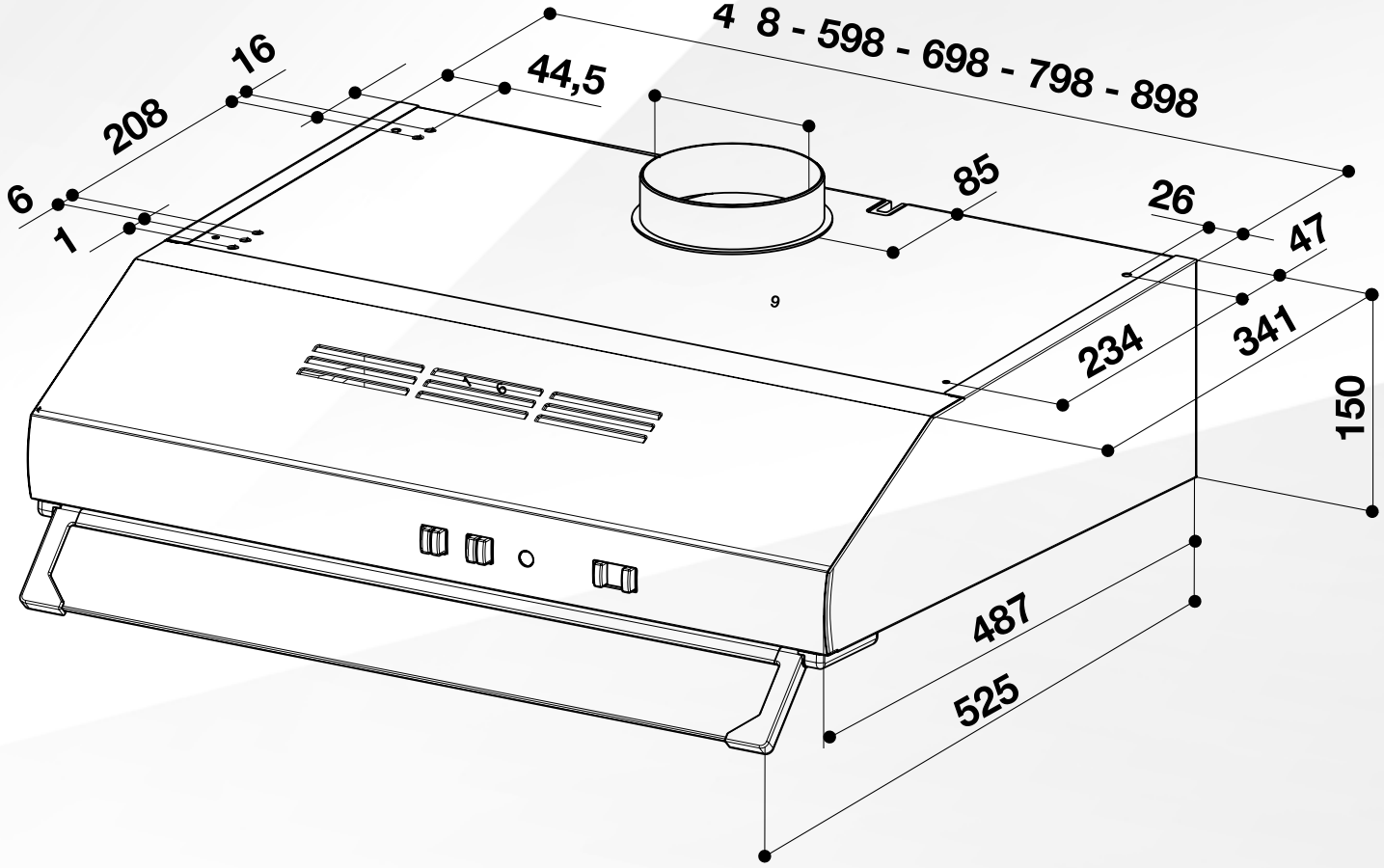
4 8 - 598 - 698 - 798 - 898
16
208
6
1
44,5
85
26
47
234
341
150
487
525