DOUBLE DOOR
FREEZER TOP

LED Illumination®

NeoFrost™ Dual Cooling

ProSmart Inverter Compressor



RDNT300XS

PRODUCT CODE
8700000708

BAR CODE
8859377106639

Dimension(cm)

155	54	60
Height	Width	Depth

10
year warranty
ProSmart™
Inverter Compressor
للحصول على 10 سنوات ضمان على الضاغط العاكس Prosmart™، الرجاء تسجيل بياناتك على الرابط التالي
Extwarranty.beko.com

HARVESTfresh™

Inspired by nature, powered by light

Even though they keep looking fresh, fruits and vegetables start to lose their vitamins when placed in the fridge. Thanks to innovative HarvestFresh™ technology, vitamins are preserved for longer*. Unique crisper technology developed for Beko fridges uses not one, but 3 efficient colours, that mimic the 24 hours sun cycle and natural sunlight. All of this so you can enjoy nutritious meals and a healthier lifestyle.

*Tested by Intertek based on Vitamin C and Vitamin A measurements in tomato, green pepper, carrot, spinach and celery directly exposed to the light technology compared to Day 0 conditions over a 5-day period.





NEOfrost™ Dual Cooling

Faster cooling for longer freshness

It's important to keep the food fresh for longer in the refrigerator. Also, it is difficult to keep fish in the freezer together with a lovely cake in the fridge without their odours mixing. Beko's separate cooling system technology for each compartment provides faster cooling by maintaining ideal air flow and optimal temperatures with an optimal level of humidity in both the freezer and the fridge. The result is the food stays fresh for longer with no frost build-up or odour transfer.

ProSmart™ Inverter Compressor

High efficiency, high durability, low noise

Don't pay lots of money for electricity bills just for a refrigerator that does the job. You can open the door as many times as you like, ProSmart™ Inverter Compressor technology will adapt and create fewer temperature variations, provide faster cooling with less energy, and allow your food to stay fresh for much longer. The compressor's design provides more durability while being 4 times quieter.



- ✓ High Efficiency
- ✓ High Durability
- ✓ Low Noise Levels



LED Illumination®

Even and efficient illumination

LED light covers the whole of the fridge, so you can find everything easily with less stress and energy. LED light on the ceiling of the fridge and LED strips on the side walls illuminate every shelf separately and provide full lighting on every part of the unit.

DOUBLE DOOR
FREEZER TOP

Key Features

- Fitting Type: Freestanding
- Product Type: Freezer Top
- Height: 155 cm
- Width: 54 cm
- Depth: 60 cm
- ProSmart Inverter Compressor: High efficiency, high durability, low noise
- Cooling System Type: No-frost
- Freezer Position: Freezer Top
- Display Type: LED
- Colour: Brushed Silver



Gross & Net Volume

- Total Gross Volume: 250 L
- Fresh Food Storage Net Volume: 162 L
- Frozen Food Storage Net Volume: 68 L

Technologies

- Vacation Mode: Extra energy saving

Fridge Features

- Fridge Shelf Type: High-durability glass shelves
- Number of Crispers: 1
- Egg Tray Capacity: 12

Freezer Features

- Ice-maker Type: Easy-access ice cubes
- Daily Ice-making Capacity (kg/day): 2 kg
- Daily Freezing Capacity (kg/day): 3 kg

Design

- LED Illumination: Clear view of the inside
- Display Position: Inner Side Wall
- Control Type: Electronic
- Door Handle Type: Flush

Performance & Consumption

- Noise Level: 40 dBA
- Climate Class: T
- Voltage: 220 - 240 V
- Frequency: 50 Hz
- Connected Value (w): 95

Dimensions & Weight

- Weight: 44 kg
- Packaged Height: 161 cm
- Packaged Width: 57.5 cm
- Packaged Depth: 63 cm
- Packaged Weight: 47 kg

Safety

- Open Door Alarm: Yes



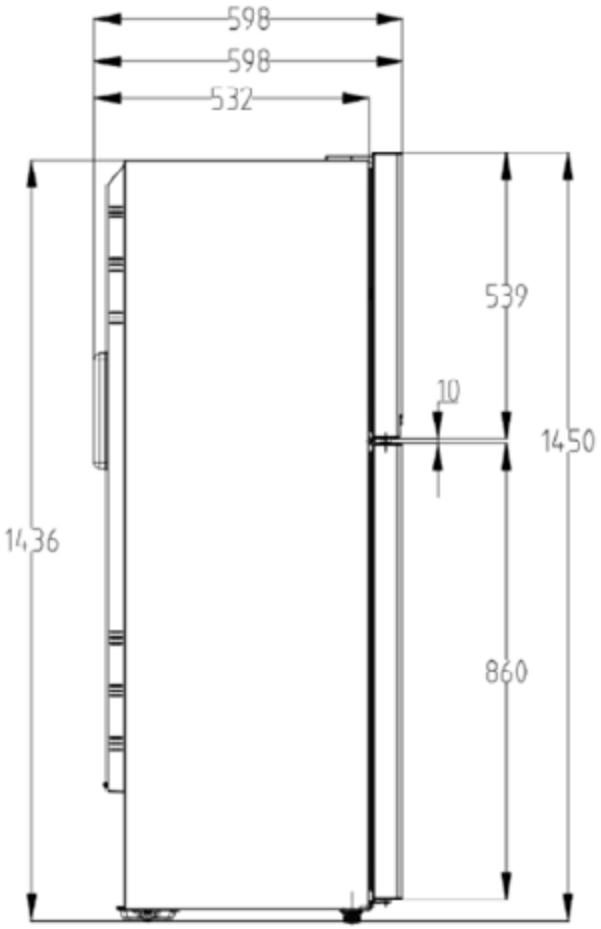
598
598
532
539
10
1450
1436
860

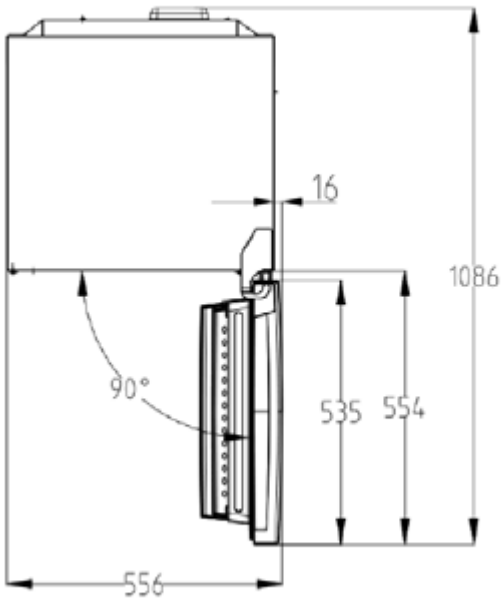
16
1086
90°
535
554
556

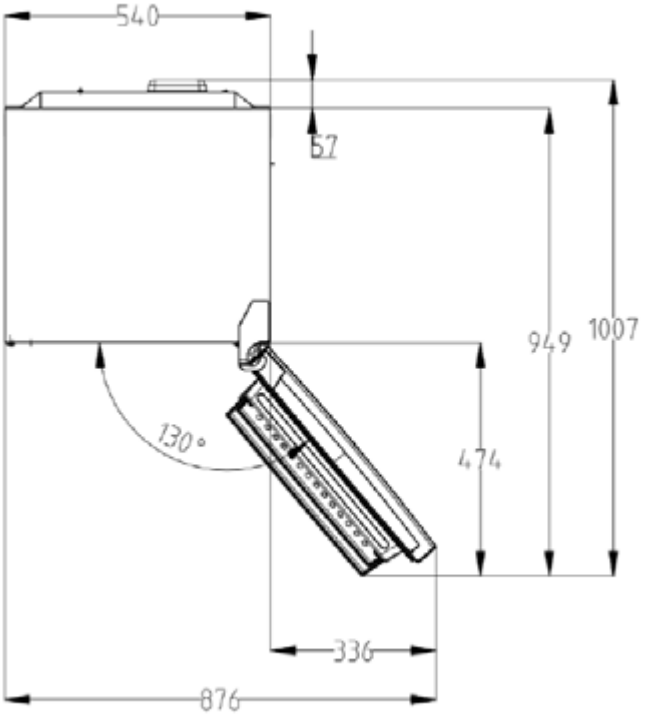
540
67
949
1007
130°
474
336
876