Series 2, domino hob, electric, 30 cm, Black,
PKF375CA2E

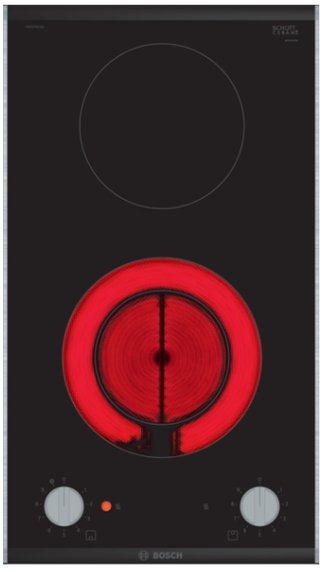

The radiant hob of the Domino programme: makes cooking and cleaning especially easy.

Technical Data

Product name/family : Vario/Domino cooking zone cera
Built-in / Free-standing : Built-in
Energy input : Electric
Total number of positions that can be used at the same time : 2
Min. required niche size for installation (HxWxD) : 48 x x mm
Width of the appliance : 306 mm
Dimensions : 48 x 306 x 527 mm
Dimensions of the packed product (HxWxD) : 120 x 375 x 590 mm
Net weight : 4.3 kg
Gross weight : 5.0 kg
Residual heat indicator : Separate
Location of control panel : Hob front
Basic surface material : Ceramic
Color of surface : Alu, brushed, Black
Length electrical supply cord : 100 cm
Connection Rating : 3200 W
Fuse protection : 16 A
Voltage : 220-240 V
Frequency : 50; 60 Hz

4 242005 283262

Series 2, domino hob, electric, 30 cm, Black, PKF375CA2E

The radiant hob of the Domino programme: makes cooking and cleaning especially easy.

Series 2, domino hob, electric, 30 cm, Black, PKF375CA2E

measurements in mm

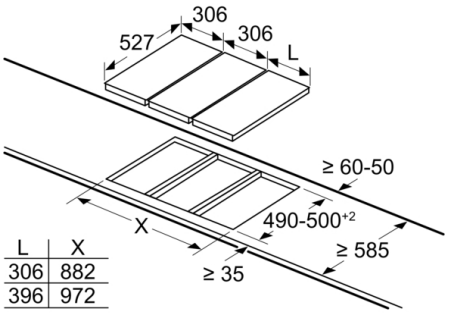

L	X
306	882
396	972

When installing two or more Domino units side-by-side, one or more assembly kits are required (2 units = 1 assembly kit, 3 units = 2 assembly kits, etc.).

measurements in mm
Picture for the table Domino combination possibilities with corresponding devices and cutout dimensions

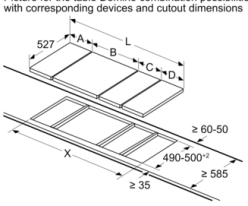

If two or more elements are installed right next to one another, one or several installation kits are required (2 elements 1 installation kit, 3 elements 2 installation kits, etc.).

Cutout dimension (X) depending on the combination see table:

measurements in mm
Domino combination options with corresponding appliance and cut-out dimensions

Width category:
Appliance width:

	A	B	C	D	L	X		
2x30	306	306	-	-			612	**576**
1x30, 1x40	306	396	-	-			702	**666**
1x30, 1x60	306	606	-	-			912	**876**
1x30, 1x70*	306	710	-	-			1016	**980**
1x30, 1x80	306	816	-	-			1122	**1086**
1x30, 1x90	306	916	-	-			1222	**1186**
2x40	396	396	-	-			792	**756**
1x40, 1x60	396	606	-	-			1002	**966**
1x40, 1x70*	396	710	-	-			1106	**1070**
1x40, 1x80	396	816	-	-			1212	**1176**
1x40, 1x90	396	916	-	-			1312	**1276**
3x30	306	306	306	-			918	**882**
2x30, 1x40	306	306	396	-			1008	**972**
2x30, 1x60	306	306	606	-			1218	**1182**
2x30, 1x70*	306	306	710	-			1322	**1286**
2x30, 1x80	306	306	816	-			1428	**1392**
2x30, 1x90	306	306	916	-			1528	**1492**
1x30, 2x40	306	396	396	-			1098	**1062**
1x30, 1x40, 1x60	306	396	606	-			1308	**1272**
1x30, 1x40, 1x70*	306	396	710	-			1412	**1376**
1x30, 1x40, 1x80	306	396	816	-			1518	**1482**
1x30, 1x40, 1x90	306	396	916	-			1618	**1582**
2x40, 1x60	396	396	606	-			1398	**1362**
4x30	306	306	306	306			1224	**1188**

measurements in mm

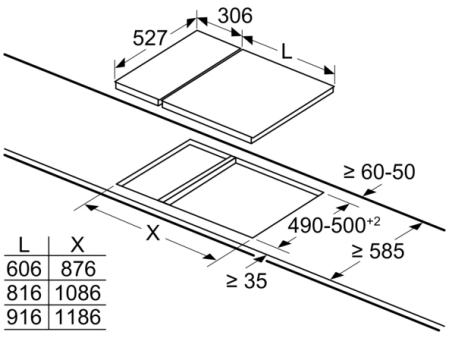

L	X
606	876
816	1086
916	1186

When installing a Domino unit right next to a hob, an assembly kit (HEZ394301) is required.

measurements in mm
Assembly kit (HEZ394301) for Domino

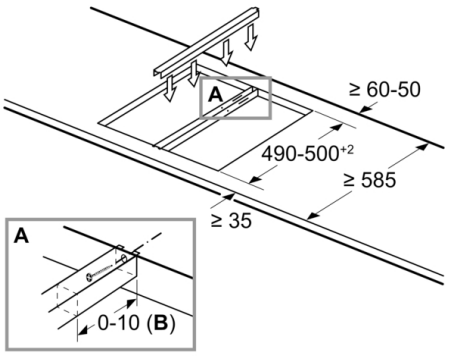

B: Dependent on the cut-out depth

measurements in mm

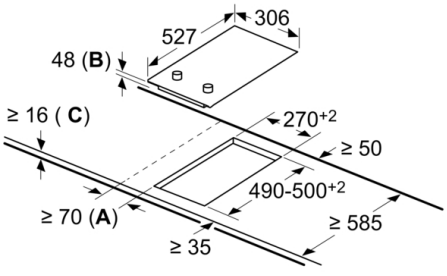

A: Minimum distance from the hob cut-out to the wall.
B: Recessed depth
C: With fitted oven underneath min. 20, possibly more; see space requirements for the oven.

Series 2, domino hob, electric, 30 cm, Black, PKF375CA2E

measurements in mm

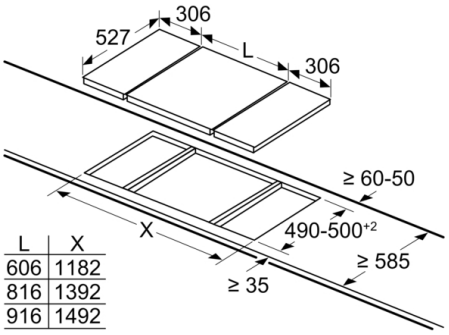

L	X
606	1182
816	1392
916	1492

When installing two Domino units right next to a hob, two assembly kits (HEZ394301) are required.

measurements in mm

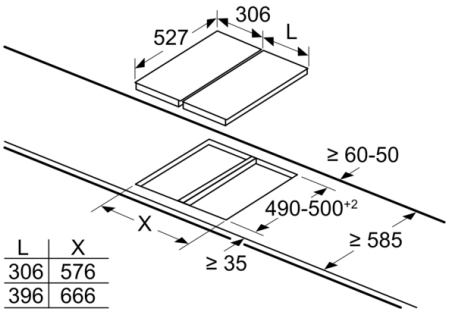

L	X
306	576
396	666

When installing two or more Domino units side-by-side, one or more assembly kits are required (2 units = 1 assembly kit, 3 units = 2 assembly kits, etc.).