

ELIO EVC 600
Vitroceramic Hob 60 cm

Key Lock, Booster

DIMENSIONS
W: 600 mm
D: 520 mm

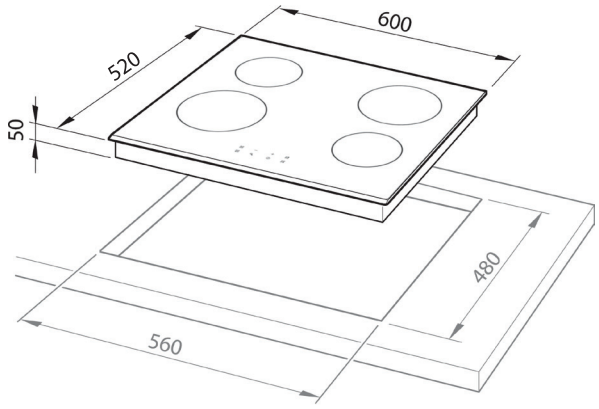

FEATURES
Ceramic glass
4 Zones
End of cooking programmer
Front touch control
Key lock
Booster
Safety devices
Residual heat indicator

SPECIFICATIONS
Total electric absorption: 6000 W
Power management from 2.5kw to maximum power

FINISH
Black