60 CM GAS OVEN
WITH GAS GRILL FUNCTION

Interior Light



Halogen Illumination

Clear view of whats happening inside

Want to see how your cooking is going but don't want to open the door and lose the heat inside? Halogen Illumination helps you see all your oven's cavity, so you can keep an eye on your culinary creations with the door firmly shut.





Durable Door

Sturdy door for carrying heavy dishes & cookware

Hot, heavy dishes and pots can be difficult to get out of the oven. Durable Door supports loads as heavy as 22.5 kg. That's 20% more than standard oven doors so you can rest your piping hot pot on the open oven door while you take a breather.

BIGT22100XML

PRODUCT CODE
7751388370

BAR CODE

Dimension(cm)

59.5	59.4	56.7
Height	Width	Depth

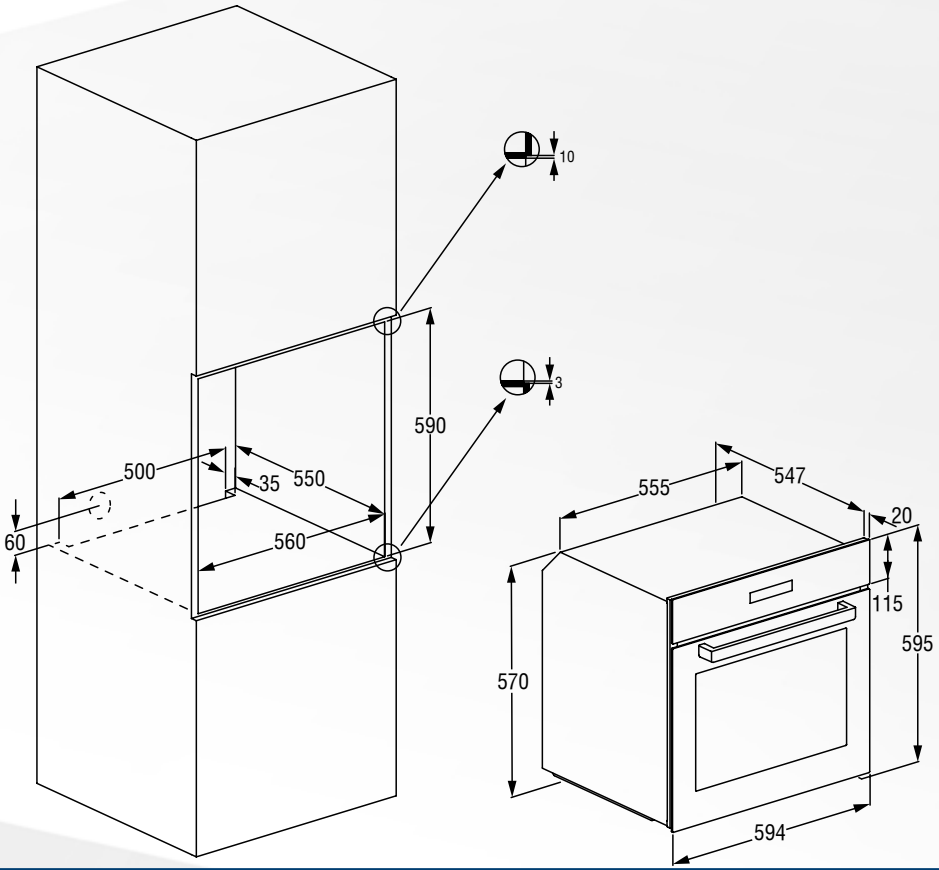

60 CM GAS OVEN
WITH GAS GRILL FUNCTION

Key Features



- Product Type: 60 cm
- Height: 59.5 cm
- Width: 59.4 cm
- Depth: 56.7 cm
- Display Type: Mechanical Timer
- Main Cavity Volume: 72 L
- Main Cavity Oven Type: Gas
- Door Opening Type: Drop-down
- Colour: Stainless Steel

Standard Accessories

- Rotisserie: Yes
- Number of Standard Trays: 1
- Number of Standard Wire Racks: 1

Technologies

- Grill Type: Gas Grill

Design

- Type of Illumination: Clear view of what's happening inside
- Number of Cavities: 1
- Installed Gas Type: LPG
- Number of Shelf Levels: 5-level Side Racks
- Cavity Colour: Black Enamel

Performance & Consumption

- Main Cavity Heat source: Gas
- Total Gas Power: 2300 W
- Total Electric Power: 26 W
- Voltage: 230 V
- Frequency: 50 - 60 Hz

Dimensions & Weight

- Weight: 31.2 kg
- Packaged Height: 65.5 cm
- Packaged Width: 66 cm
- Packaged Depth: 66 cm
- Packaged Weight: 33.5 kg
- Niche Dimensions - Cabinet (WxDxH) (mm): 560×550×590
- Niche Dimensions (W×D×H) (mm): 560×550×600