90 CM MULTIFUNCTIONAL OVEN WITH **8 COOKING FUNCTIONS**



SPECIFICATIONS

- Product Color: Black
- LED Display
- Turnspit
- Integrated ignition
- Cooling Fan
- Triple glass door
- Interior lighting
- 5-level Side Racks
- SoftClose Door
- Removable Door Glass
- SteamShine cleaning
- Multifunctional Cooking
- 8 functions
- Electric Grill

SAFETY

- Child lock

DIMENSIONS

- H x W x D: 59.5 x 89.6 x 56.5

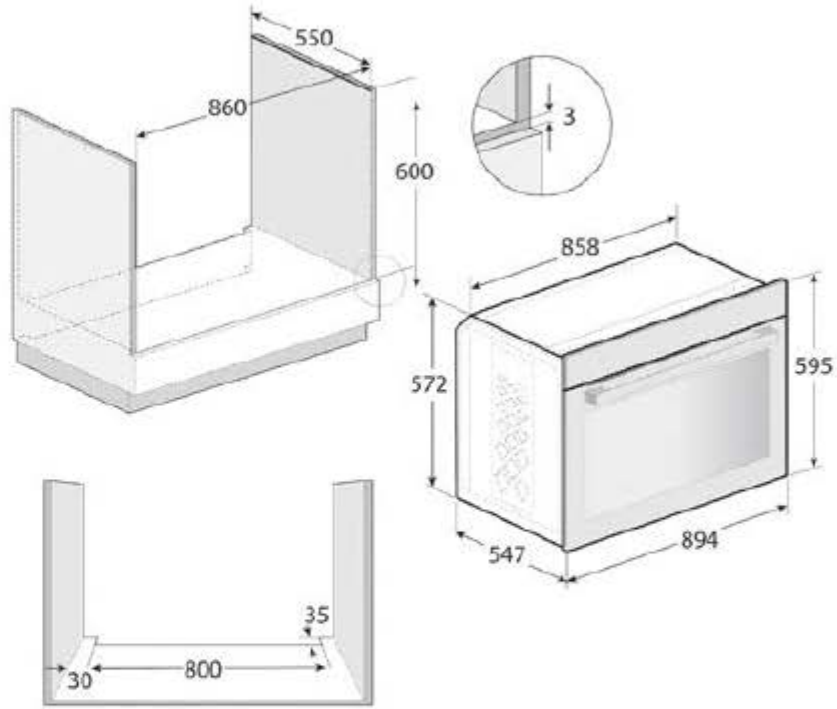

BBWMT12301BG

