Series 6, Built-in oven, 90 x 60 cm, Black
VBD578FB0

The built-in oven with hotair, 90 cm width: achieve perfect baking and roasting results for big roasts or dishes of large quantities

- **Hotair function**: even results on one or two levels thanks to optimal heat distribution.
- **Pyrolytic self-cleaning**: less cleaning effort thanks to automatic self-cleaning.
- **White LCD display control**: easy to use with direct access to functions and clear temperature indication.
- **Pizza setting**: ideal for cooking pizza and dishes that require intensive heat from below.
- **Level-independent telescopic rails**: clip-on rails for safer, easier handling of baking trays on any level.

Color / Material Front: ..... Black
Built-in / Free-standing: ..... Built-in
Door opening: ..... Drop down
Cleaning : ..... Pyrolytic+Hydrolytic
Control Panel Material: ..... brushed stainless steel
Door Material: ..... Glass
Dimensions (HxWxD): ..... 594x896x570 mm
Dimensions of the packed product (HxWxD): ..... 700x960x685 mm
Required niche size for installation (HxWxD): .... 600-604 x 860-864 x 560 mm
Cavity dimensions: ..... 371 x 724 x 417 mm
Usable volume of cavity: ..... 112 l
Net weight: ..... 63.7 kg
Gross weight: ..... 73.0 kg
EAN code: 4242005337392
Connection rating: ..... 4200 W
Fuse protection: ..... 12 A
Voltage: ..... 220-240 V
Frequency: ..... 50-60 Hz
Length electrical supply cord: ..... 115 cm

---

4 242005 337392

Series 6, Built-in oven, 90 x 60 cm, Black
VBD578FB0

The built-in oven with hotair, 90 cm width: achieve perfect baking and roasting results for big roasts or dishes of large quantities

- 90 cm built-in oven with 10heating methods:
- Hot Air Standard
- Top/bottom heating
- 2D Hotair
- Hot air grilling
- Full width grill
- Pizza setting
- Bottom heating
- Defrost
- Temperature range 50 °C - 280 °C
- Cavity volume: 112 l

Racks and Rails

- 1 set of level independent telescopic rails (Clip-on rail)

Design

- Rotary control knobs, Retractable control knobs, Touch control

Cleaning

- Pyrolytic self-cleaning function
- Cleaning Assistance - cleaning option for light soiling
- Full glass inner door

Convenience

- LCD-display control (white), Electronic Control
- Electronic clock/timer with end time programming
- Drop down door
- Fast pre-heating function
- Halogen lighting
- Integrated cooling fan
- Bar handle

Accessories

- 1 x enamel baking tray, 1 x rotary spit, 1 x insert grid, 2 x combination grid, 1 x universal pan
- Electronic door lock, Child lock, Automatic safety switch off function, Residual heat indicator, Door contact switch
- Length of mains cable: 115 cm
- Nominal voltage: 220 - 240 V
- Total connected load electric: 4.2 KW

Dimensions

- Appliance dimensions (HxWxD): 594 mm x 896 mm x 570 mm
- Installation dimensions (HxWxD): 600 mm - 604 mm x 860 mm - 864 mm x 560 mm
- Please reference the built-in dimensions provided in the installation drawing

Series 6, Built-in oven, 90 x 60 cm, Black
VBD578FB0

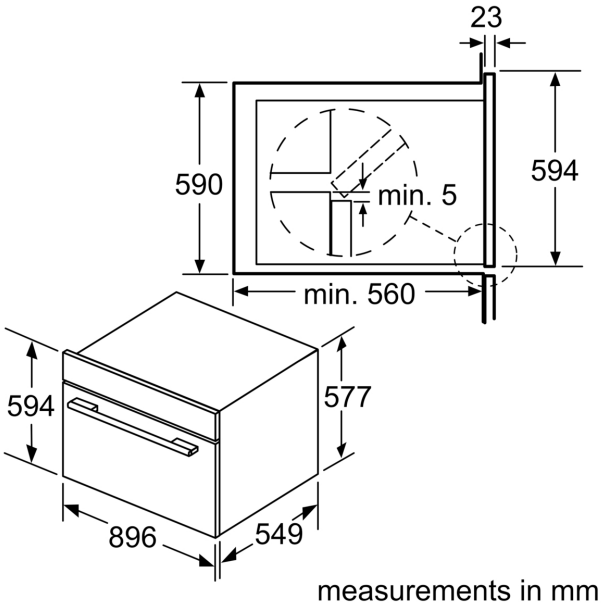

measurements in mm

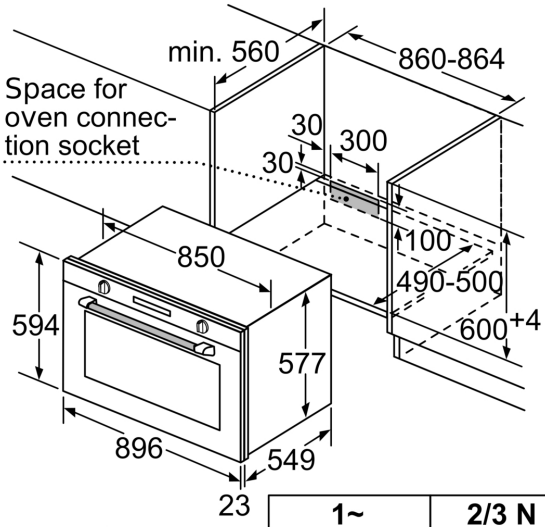

	1~	2/3 N ~
4.2 kW	min. 20 A	min. 12 A

measurements in mm

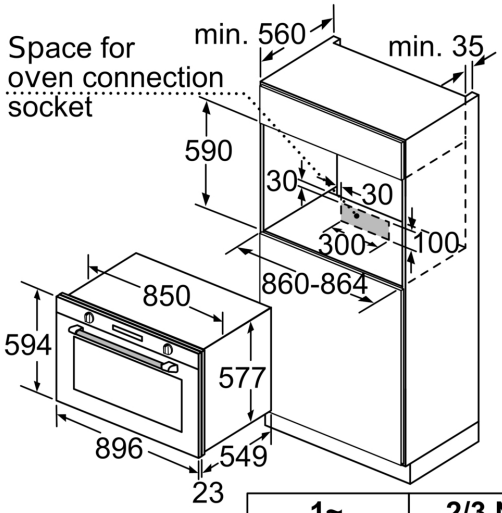

	1~	2/3 N ~
4.2 kW	min. 20 A	min. 12 A

measurements in mm