Series 4, Built-in oven with added steam function, 60 x 60 cm, Black HUA736EA0M



- **3D Hotair**: perfect results thanks to optimal distribution of heat on up to 3 levels simultaneously - without taste transfer.
- **AutoPilot 10**: every dish is a perfect success thanks to 10 pre-set automatic programmes.
- **The Wall Oven is Designed to be Installed Flush with Your Cabinetry.**
- **Cleaning Assistance**: less cleaning effort
- **Hotair Gentle**: saves energy while baking and roasting.

1 x combination grid, 1 x universal pan, 1 x air fry & grill tray, 1 x deep tray

HEZ327000	Pizza stone
HEZ638000	Full ext rails, level independent

Gross weight: ..... 35.6 kg
Built-in / Free-standing: ..... Built-in
Integrated Cleaning system: .....CleanCoating, Hydrolytic
Required niche size for installation (HxWxD): ....585-595 x 560-568 x 550 mm
Dimensions: ..... 595x594x548 mm
Dimensions of the packed product (HxWxD): .....670x665x685 mm
Control Panel Material: ..... Glass
Door Material: ..... Glass
Net weight: .....33.3 kg
Usable volume of cavity: ..... 76 l
Cooking method: ..... , Full width grill, Hotair gentle, Hot Air, Conventional heat, Bottom heat, Hot air grilling
Length electrical supply cord: .....120 cm
Pull-out system: 1-level
Included accessories: 1 x combination grid, 1 x universal pan, 1 x air fry & grill tray, 1 x deep tray
Broil Element Wattages cavity 1: .....2700 W
Energy efficiency rating: .....A
Energy consumption per cycle conventional (2010/30/EC): .....0.98 kWh/cycle
Energy consumption per cycle forced air convection (2010/30/EC): .....0.83 kWh/cycle
Energy efficiency index (2010/30/EC): .....95.4 %
Connection rating: ..... 2800 W
Fuse protection: .....13 A
Voltage: ..... 220-240 V
Frequency: ..... 50; 60 Hz
Plug type: .....no plug
Connecting cable type: .....1-phase, neutral conductor
Energy input: .....Electric
Dimensions of the packed product: ..... 26.37 x 26.18 x 26.96
Net weight: .....73.000 lbs
Gross weight: ..... 78.000 lbs

4 242005 495054

Series 4, Built-in oven with added steam function, 60 x 60 cm, Black HUA736EA0M

Type of oven / heating system:

- Oven with 8 heating methods: Hot air, Top/bottom heat, hot air grilling, Full width grill, Bottom heat, Hotair gentle, hot air + steam
- Temperature range 50 °C - 275 °C
- Cavity volume: 76 l

Hook-in racks / rails

- Number of shelf levels: 5 PC

Design:

- Rotary Control
- Cavity inner surface: enamel anthracite
- Extra large capacity oven

Cleaning:

- Ecolyse features: back panel
- hydrolyse program
- Full glass inner door

Comfort:

- Electronic clock
- automatic start
- heating-up control
- automatic programming, 10
- bar handle
- Supporting systems: Programs
- Halogen interior lighting
- Water bowl with a volume of 250 ml
- Integral cooling fan

Accessory:

- 1 x air fry & grill tray, 1 x combination grid, 1 x deep tray, 1 x universal pan

Environment and Safety:

- Child lock
- Residual heat indicator

Technical Info:

- Length of mains cable: 120 cm
- Nominal voltage: 220 - 240 V
- Total connected load electric: 2.8 KW
- Energy efficiency rating (acc. EU Nr. 65/2014): A
- Energy consumption per cycle in conventional mode: 0.98 kWh
- Energy consumption per cycle in fan-forced convection mode: 0.83 kWh
- Number of cavities: 1
- Heat source: electrical
- Cavity volume: 76 l

Dimensions:

- Appliance dimension (hxwxd): 595 mm x 594 mm x 548 mm
- Niche dimension (hxwxd): 585 mm - 595 mm x 560 mm - 568 mm x 550 mm
- “Please reference the built-in dimensions provided in the installation drawing”

Series 4, Built-in oven with added steam function, 60 x 60 cm, Black
HUA736EA0M

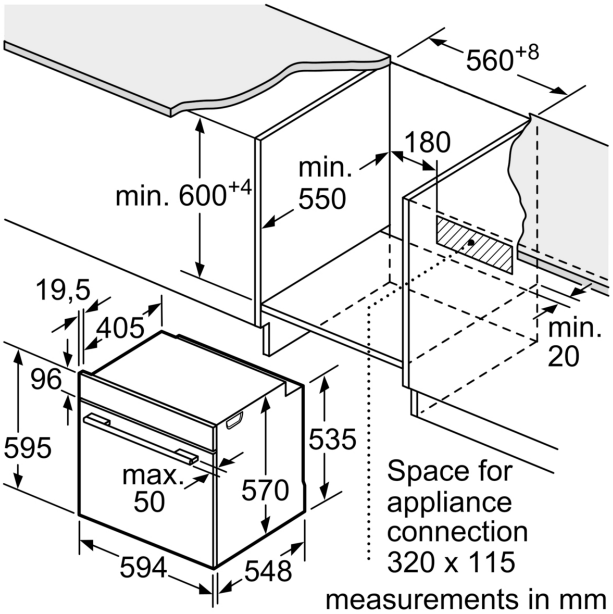

measurements in mm

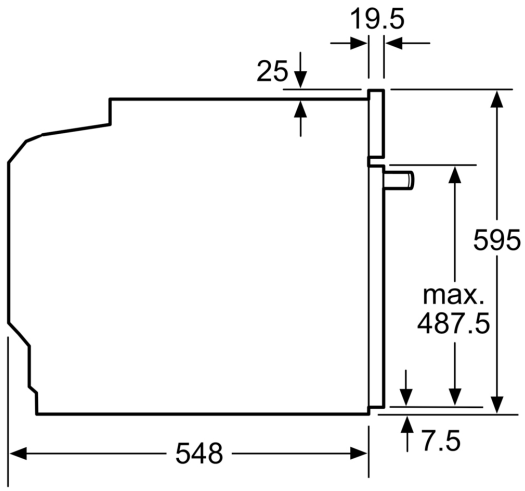

measurements in mm

Measurements in mm

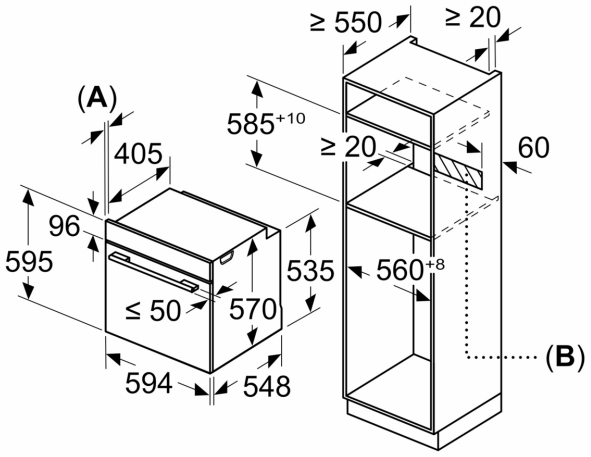

A: 19.5 mm
B: Space for appliance connection 320 x 115 mm

Installation with a hob.

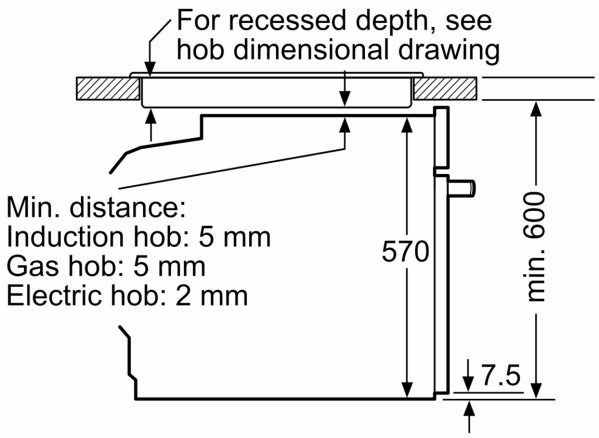

measurements in mm